Caution!

After installation of fuel tank / prior to first engine start-up:

Check resistance between metal filler bowl and wheel hub.

Measured value approx. 0.6 Ω.

Fill fuel tank with at least 5 liters of fuel.

M47, M57

After introducing fuel, turn on ignition and wait approx. 1 minute. The fuel system is thus vented, making it easier to start the engine.

Draw off fuel from fuel tank.

Detach handbrake cables from handbrake lever.

Remove propeller shaft.

Remove tension strut on left and right (E46 convertible only).

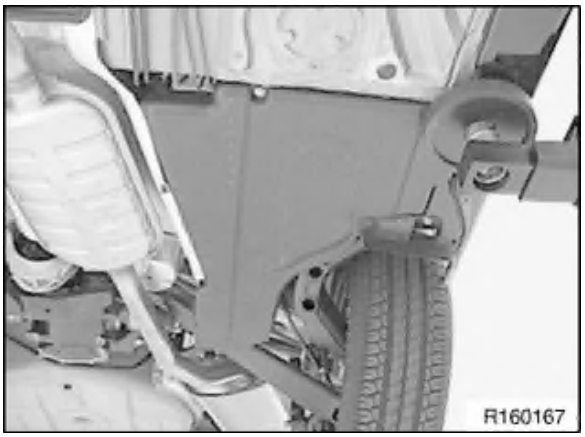

Remove tank trim on left.

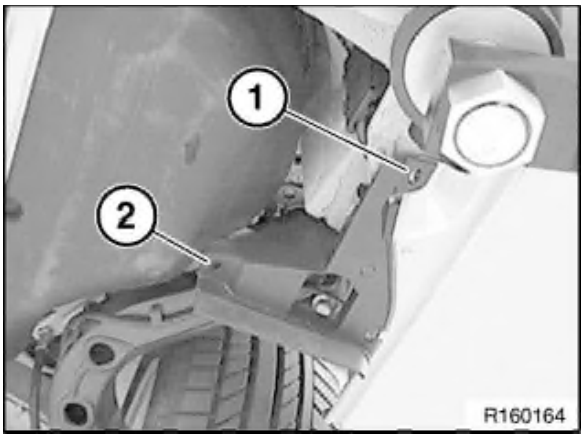

Remove lip (2) on left, pay attention to guide (1) during installation.

Remove tank trim on right.

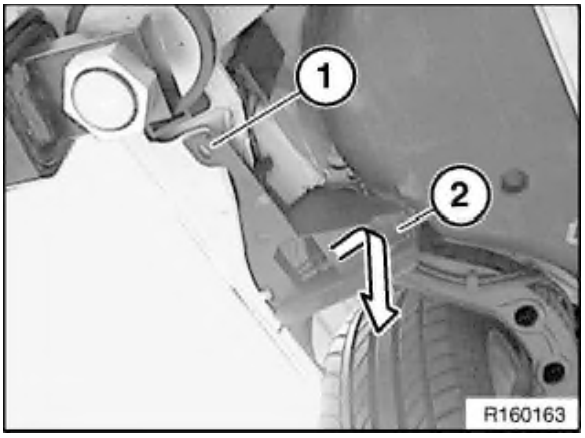

Remove lip (2) on right, pay attention to guide (1) during installation.

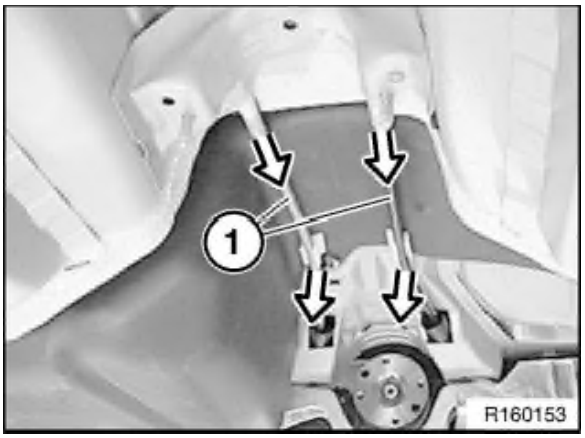

Pull handbrake Bowden cables (1) out of guide tubes.

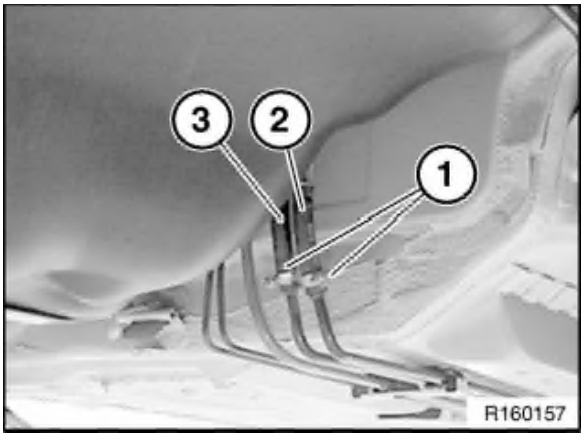

Release hose clips (1) and detach fuel lines.

2) Feed line

3) Return line

Installation:

Replace hose clips.

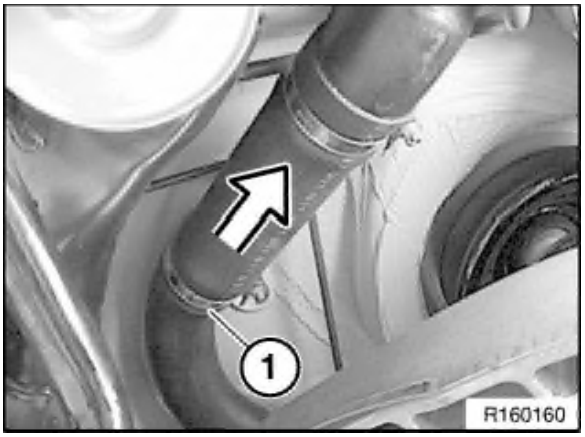

Release hose clamp (1) and detach fuel filler pipe-fuel tank connecting hose from fuel tank.

Installation:

Replace hose clips.

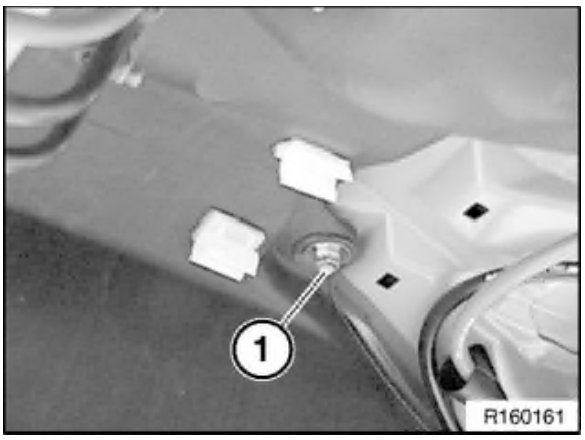

Support fuel tank over a wide area with a lifter.

Release hexagon nut (1).

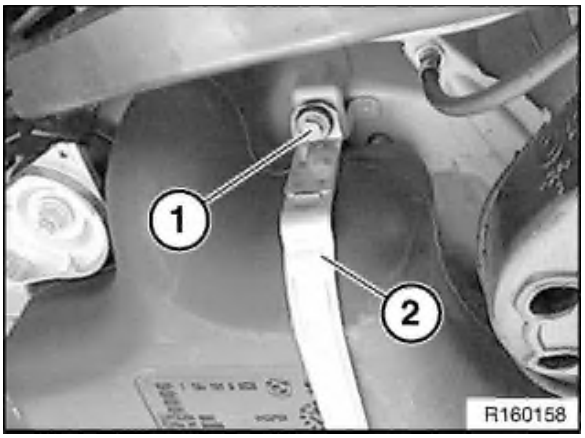

Right

Release screw (1), remove tightening strap (2).

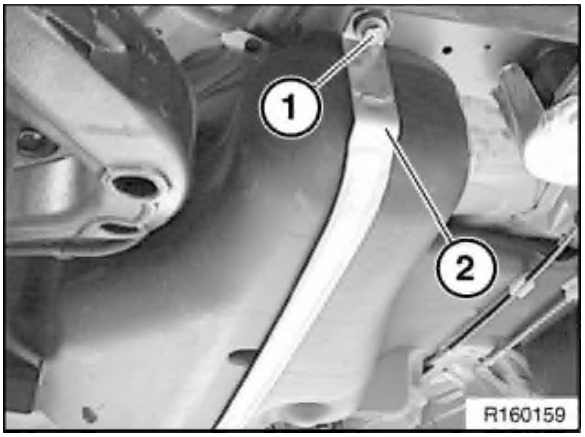

Left

Release screw (1), remove tightening strap (2).

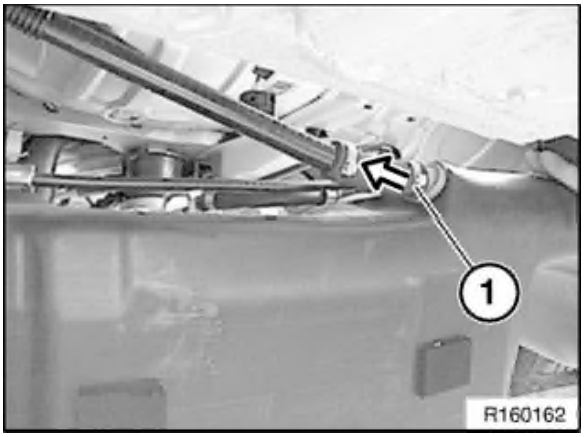

Lower fuel tank and disconnect plug connections.

Release hose clamp (1), disconnect vent line.

Remove fuel tank towards bottom.

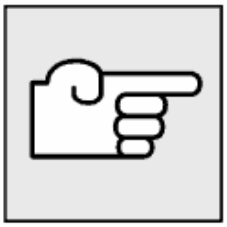

Note:

M3 only!

Before installing a new fuel tank, it is absolutely essential to fit the swirl pot attachment on the swirl pot.