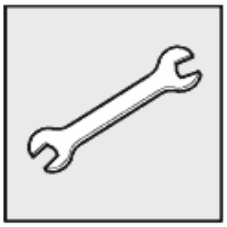

Special tools required:

- 26 1 040

Necessary preliminary tasks:

- Remove complete exhaust system.

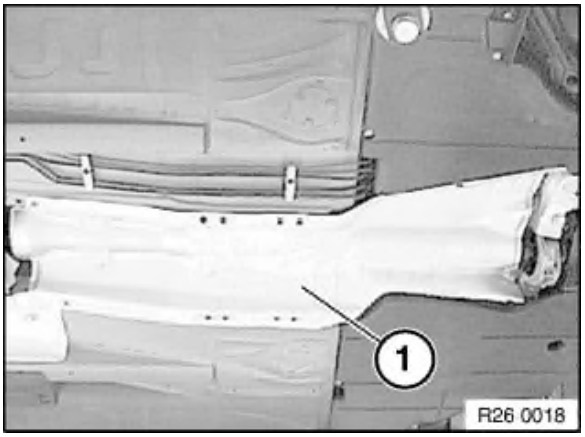

Remove heat shield (1).

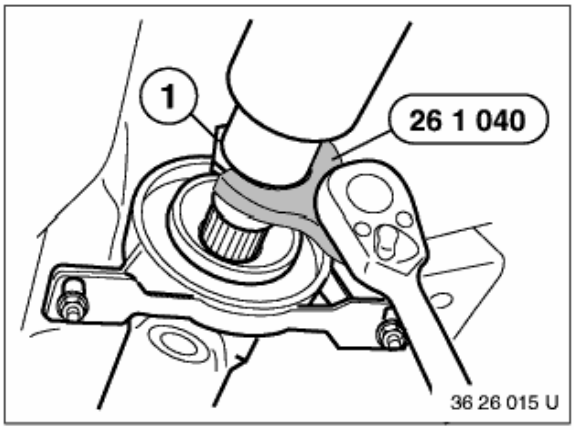

Release threaded ring (1) several turns with special tool 26 1 040 .

Installation:

Tighten threaded ring with special tool 26 1 040 .

Tightening torque: 26 11 3AZ .

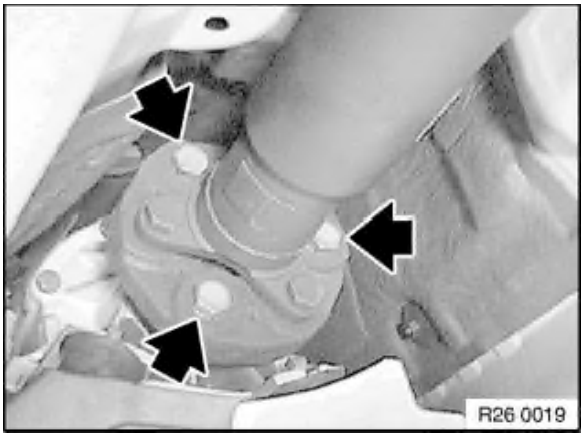

Unfasten screws.

Tightening torque: 26 11 1AZ .

Installation:

- Replace self-locking nuts
- Grip heads of mounting screws of flexible disk on transmission flange and tighten down at nuts.

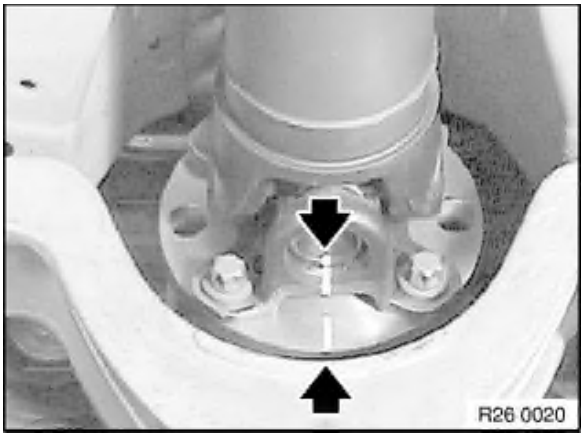

Important!

To avoid complaints of humming:

Before removing propeller shaft, mark cardan universal joint to drive flange of final drive.

Reinstall joint in this position.

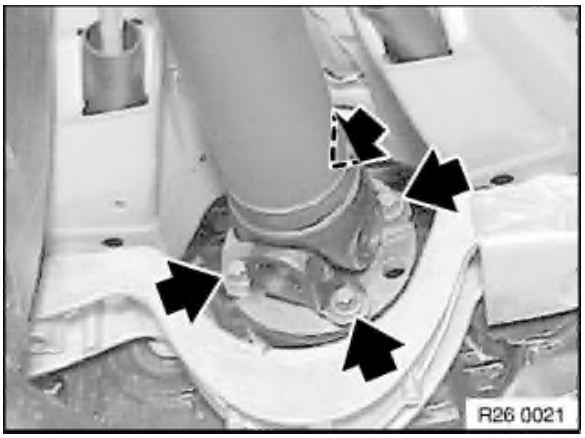

Unfasten screws.

Tightening torque: 26 11 4AZ .

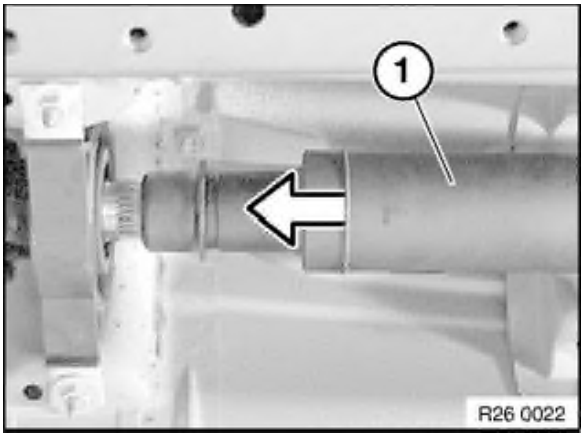

Push rear propeller shaft (1) forwards.

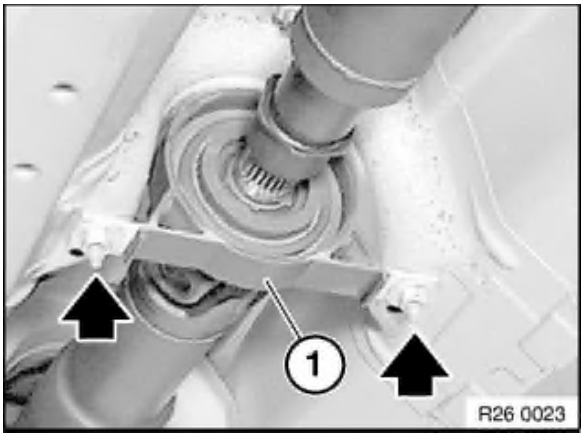

Grip propeller shaft and release nuts.

Tightening torque: 26 11 6AZ .

Bend propeller shaft downwards at center bearing (1).

Detach propeller shaft from transmission output flange and remove downwards.

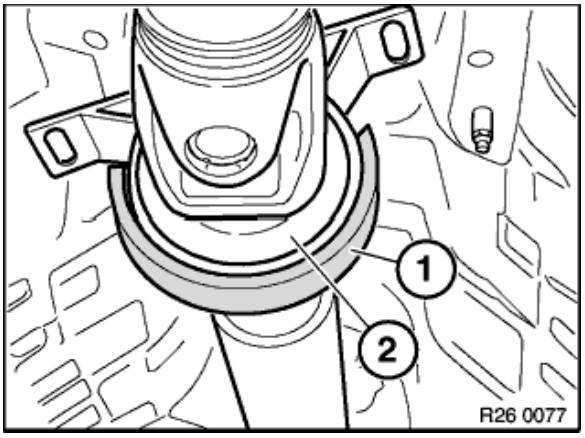

Installation (except E46 Compact and Z4):

Pull off cover tape from butylene tape on both sides.

Stick outer butylene tape (1) to center bearing (2).

- Butylene tape: BMW Parts Service

Important!

(except E46 Compact and Z4)

- Remove butylene tape already attached to center bearing.
- Clean adhesive area on center bearing and on body
- Then coat adhesive area on body with mineral oil

  This coating with oil is necessary to facilitate insertion of the sticky butylene tape in the propeller shaft tunnel.

  This prevents the butylene tape from being deformed.

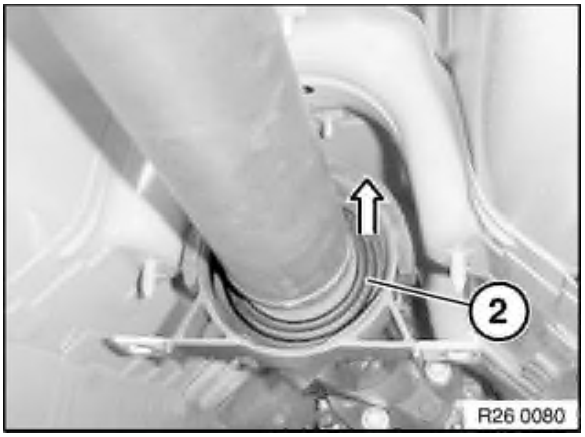

Installation:

Press center bearing (2) into transmission tunnel.

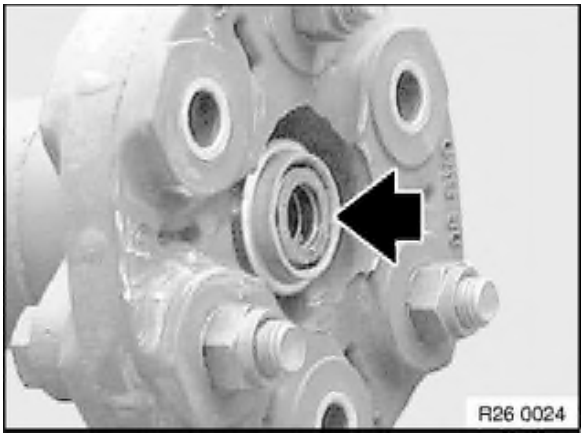

Installation:

Check centering; if necessary, replace damaged centering.

Grease centering mount.

- Grease: BMW Service Operating Fluids.